De Rev 54536 3d/11 12det

Work Order ID 53873

November 23, 2009 8:09:10 AM

Item ID: D3215-3
Revision ID: D
Item Name: Webbing Tidy

Accept

Setup Start
Stop

Start Date: 23/11/2009 **Start Qty:** 20.00
Required Date: 27/11/2009 **Req'd Qty:** 20.00
Reference:

Cust Item ID:
Customer:

Run Start
Stop

Approvals: **Process Plan:** [illegible] **Date:** 09-11-23 **Tooling:** _____ **Date:** _____
QC: _____ **Date:** _____ **SPC (Y/N):** _____ **Date:** _____

Sequence ID/ Work Center ID	Operation Description	Set Up/ Run Hours	Draw Number	Draw Rev.	Plan Code	Accept Qty	Reject Qty	Reject Number	Insp. Stamp
Draw Nbr	**Revision Nbr**								
D3215	Rev D								
100	FLOW WATER JET	0.00							
Waterjet	**Memo**	0.00							
FLOW CNC Waterjet	1-Cut as per Dwg D3215 (D3215-3A) Rev: D ☐2-Deburr if necessary ☐Dwg Rev: D ☐Prog ☐3-Identify as D3215-3A								
110	QC2- Inspect parts off machine FAI/FAIB	0.00							
QC	**Memo**	0.00							
Quality Control									
120	QC8- Inspect parts - second check	0.00							
QC	**Memo**	0.00							
Quality Control									

HB 9-11-23

09/11/30 (49) (49)

HB 9-11-25

counter (449) ϕ

27 S 09/11/30

Dart Aerospace Ltd

W/O:		WORK ORDER CHANGES					
DATE	STEP	PROCEDURE CHANGE	By	Date	Qty	Approval Chief Eng / Prod Mgr	Approval QC Inspector

Part No: _____ PAR #: _____ Fault Category: _____ NCR: Yes No DQA: _____ Date: _____

Resolution: _____ Disposition: _____ QA: N/C Closed: _____ Date: _____

NCR:		WORK ORDER NON-CONFORMANCE (NCR)						
DATE	STEP	Description of NC Section A	Corrective Action Section B			Verification Section C	Approval Chief Eng	Approval QC Inspector
			Initial Chief Eng	Action Description Chief Eng	Sign & Date			

NOTE: Date & initial all entries

H:\fFORMS\Quality Assurance\approved QA\NCRWO RevE

Work Order ID 53873

November 23, 2009 8:09:10 AM

Item ID: D3215-3
Revision ID: D
Item Name: Webbing Tidy
Start Date: 23/11/2009 **Start Qty:** 20.00
Required Date: 27/11/2009 **Reqd Qty:** 20.00
Reference:

Accept

Cust Item ID:
Customer:

Setup Start
Stop

Run Start
Stop

Approvals: **Process Plan:** _____ **Date:** _____ **Tooling:** _____ **Date:** _____
QC: _____ **Date:** _____ **SPC (Y/N):** _____ **Date:** _____

Sequence ID/ Work Center ID	Operation Description	Set Up/ Run Hours	Draw Number	Draw Rev.	Plan Code	Accept Qty	Reject Qty	Reject Number	Insp. Stamp
130 Small Fab Small Fab	Small Fab **Memo** 1-Cut D3215-3B (2.130" x 0.530") as per dwg D3215□2-Deburr□3-Identify as D3215-3B	0.00 0.00				09/12/02			49
140 QC Quality Control	QC5- Inspect part completeness to step on W/O **Memo**	0.00 0.00				counted 49	ø		
150 Brake NC Brake NC	NC BRAKE **Memo** Form D3215-3A as per Dwg D3215	0.00 0.00				49	ø		

Dart Aerospace Ltd

W/O:		WORK ORDER CHANGES					
DATE	STEP	PROCEDURE CHANGE	By	Date	Qty	Approval Chief Eng / Prod Mgr	Approval QC Inspector

Part No: _____ PAR #: _____ Fault Category: _____ NCR: Yes No DQA: _____ Date: _____

Resolution: _____ Disposition: _____ QA: N/C Closed: _____ Date: _____

NCR:		WORK ORDER NON-CONFORMANCE (NCR)						
DATE	STEP	Description of NC Section A	Corrective Action Section B			Verification Section C	Approval Chief Eng	Approval QC Inspector
			Initial Chief Eng	Action Description Chief Eng	Sign & Date			

NOTE: Date & initial all entries

H:\fFORMS\Quality Assurance\approved QA\NCRWO RevE

Work Order ID 53873

November 23, 2009 8:09:10 AM

Item ID: D3215-3
Revision ID: D
Item Name: Webbing Tidy

Accept

Setup **Start** **Stop**

Start Date: 23/11/2009 **Start Qty:** 20.00
Required Date: 27/11/2009 **Req'd Qty:** 20.00
Reference:

Cust Item ID:
Customer:

Run **Start** **Stop**

Approvals: **Process Plan:** _____ **Date:** _____ **Tooling:** _____ **Date:** _____
QC: _____ **Date:** _____ **SPC (Y/N):** _____ **Date:** _____

Sequence ID/ Work Center ID	Operation Description	Set Up/ Run Hours	Draw Number	Draw Rev.	Plan Code	Accept Qty	Reject Qty	Reject Number	Insp. Stamp
160	QC5- Inspect part completeness to step on W/O	0.00				counter (49)	1		
QC	Memo	0.00							
Quality Control									
170		0.00							
Large Fab	Large Fab					SP	09.12.8.		
	Memo	0.00							
Large Fab	Weld D3215-3 by joining D3215-3A and D3215-3B as per Dwg D3215 and QSI 004□A/R AL ROD BATCH: M 111385 □Identify as D3215-3□Grind flush								
180	QC9- Inspect visual per QSI004- Fusion Welds	0.00							
QC	Memo	0.00				PD	09.12.08		
Quality Control						49			

Dart Aerospace Ltd

W/O:		WORK ORDER CHANGES					
DATE	STEP	PROCEDURE CHANGE	By	Date	Qty	Approval Chief Eng / Prod Mgr	Approval QC Inspector

Part No: _____ PAR #: _____ Fault Category: _____ NCR: Yes No DQA: _____ Date: _____

Resolution: _____ Disposition: _____ QA: N/C Closed: _____ Date: _____

NCR:		WORK ORDER NON-CONFORMANCE (NCR)						
DATE	STEP	Description of NC Section A	Corrective Action Section B			Verification Section C	Approval Chief Eng	Approval QC Inspector
			Initial Chief Eng	Action Description Chief Eng	Sign & Date			

NOTE: Date & initial all entries

H:\fFORMS\Quality Assurance\approved QA\NCRWO RevE

Work Order ID 53873

November 23, 2009 8:09:10 AM

Item ID: D3215-3
Revision ID: D
Item Name: Webbing Tidy

Accept

Setup Start
Stop

Start Date: 23/11/2009 **Start Qty:** 20.00
Required Date: 27/11/2009 **Req'd Qty:** 20.00
Reference:

Cust Item ID:
Customer:

Run Start
Stop

Approvals: **Process Plan:** _____ **Date:** _____ **Tooling:** _____ **Date:** _____
QC: _____ **Date:** _____ **SPC (Y/N):** _____ **Date:** _____

Sequence ID/ Work Center ID	Operation Description	Set Up/ Run Hours	Draw Number	Draw Rev.	Plan Code	Accept Qty	Reject Qty	Reject Number	Insp. Stamp
190 QC Quality Control	QC5- Inspect part completeness to step on W/O **Memo**	0.00 0.00				counted X49	0		
200 HandFinish Hand Finishing	Chemical Conversion Coat per QSI005 4.1 **Memo**	0.00 0.00				counted! X49	0		
210 Powdercoat Powder Coating	Black Sandtex(Ref:4.3.5.7) per QSI005 4.3 **Memo** START TIME: 1:20 ☐OVEN TEMPERATURE: ~~320°~~ ☐FINISH TIME: ~~1:50~~	0.00 0.00				X49			

Dart Aerospace Ltd

W/O:		WORK ORDER CHANGES					
DATE	STEP	PROCEDURE CHANGE	By	Date	Qty	Approval Chief Eng / Prod Mgr	Approval QC Inspector

Part No: _____ PAR #: _____ Fault Category: _____ NCR: Yes No DQA: _____ Date: _____

Resolution: _____ Disposition: _____ QA: N/C Closed: _____ Date: _____

NCR:		WORK ORDER NON-CONFORMANCE (NCR)						
DATE	STEP	Description of NC Section A	Corrective Action Section B			Verification Section C	Approval Chief Eng	Approval QC Inspector
			Initial Chief Eng	Action Description Chief Eng	Sign & Date			

NOTE: Date & initial all entries

H:\fFORMS\Quality Assurance\approved QA\NCRWO RevE

Work Order ID 53873

November 23, 2009 8:09:10 AM

Item ID: D3215-3
Revision ID: D
Item Name: Webbing Tidy

Start Date: 23/11/2009 **Start Qty:** 20.00
Required Date: 27/11/2009 **Req'd Qty:** 20.00
Reference:

Accept

Cust Item ID:
Customer:

Setup **Start** **Stop**

Run **Start** **Stop**

Approvals: **Process Plan:** _____ **Date:** _____ **Tooling:** _____ **Date:** _____
QC: _____ **Date:** _____ **SPC (Y/N):** _____ **Date:** _____

Sequence ID/ Work Center ID	Operation Description	Set Up/ Run Hours	Draw Number	Draw Rev.	Plan Code	Accept Qty	Reject Qty	Reject Number	Insp. Stamp
220	QC3- Inspect Part Finish	0.00							
QC	Memo	0.00				X49	Ø		
Quality Control									
230		0.00							
Packaging	Packaging								
Packaging	Memo	0.00				CL	09/12/10	49	
240	QC21- Final Inspection - Work Order Release	0.00							
QC	Memo	0.00						09/12/11	
Quality Control								09-12-11	

Dart Aerospace Ltd

W/O:		WORK ORDER CHANGES					
DATE	STEP	PROCEDURE CHANGE	By	Date	Qty	Approval Chief Eng / Prod Mgr	Approval QC Inspector

Part No: _____ PAR #: _____ Fault Category: _____ NCR: Yes No DQA: _____ Date: _____

Resolution: _____ Disposition: _____ QA: N/C Closed: _____ Date: _____

NCR:		WORK ORDER NON-CONFORMANCE (NCR)						
DATE	STEP	Description of NC Section A	Corrective Action Section B			Verification Section C	Approval Chief Eng	Approval QC Inspector
			Initial Chief Eng	Action Description Chief Eng	Sign & Date			

NOTE: Date & initial all entries

H:\fFORMS\Quality Assurance\approved QA\NCRWO RevE

Picklist Print

November 23, 2009 8:09:19 AM

Work Order ID: 53873

Parent Item: D3215-3RevD

Parent Item Name: Webbing Tidy

Comments:

Start Date: 23/11/2009 **Required Date:** 27/11/2009

Start Qty: 20.00 **Required Qty:** 20.00

Component Item ID/ Item Name	Replacement Item ID	Mfg/ Purch	Bin Item	Primary Location	Last Location	Route Seq ID	Unit of Measure	Qty on Hand	Remaining Qty To Pick	Qty Issued	Date Issued	Status
M5052H32S.040		Purchased	No			100	sf	121.8000	0.1684		09/12/01	
5052-H32 .040 Sheet												

Warehouse Location	Loc Qty	Loc Code	
Main Warehouse			
MAT	121.8		
101875	8.125		
102723	1		
104921	6.5		0.1684
106900	2		
107513	4.5		
109058	35.675		
113123	64		

Component Item ID/ Item Name	Replacement Item ID	Mfg/ Purch	Bin Item	Primary Location	Last Location	Route Seq ID	Unit of Measure	Qty on Hand	Remaining Qty To Pick	Qty Issued	Date Issued	Status
M5052H32S.040		Purchased	No			130	sf	121.8000	0.5432	1.3036	BG 9-11-05	
5052-H32 .040 Sheet												

Warehouse Location	Loc Qty	Loc Code	
Main Warehouse			
MAT	121.8		
101875	8.125		
102723	1		
104921	6.5		104921
106900	2		
107513	4.5		
109058	35.675		
113123	64		

48

Dart Aerospace Ltd

W/O:		WORK ORDER CHANGES					
DATE	STEP	PROCEDURE CHANGE	By	Date	Qty	Approval Chief Eng / Prod Mgr	Approval QC Inspector

Part No: _____ **PAR #:** _____ **Fault Category:** _____ **NCR:** Yes No **DQA:** _____ **Date:** _____

Resolution: _____ **Disposition:** _____ **QA: N/C Closed:** _____ **Date:** _____

NCR:		WORK ORDER NON-CONFORMANCE (NCR)						
DATE	STEP	Description of NC Section A	Corrective Action Section B			Verification Section C	Approval Chief Eng	Approval QC Inspector
			Initial Chief Eng	Action Description Chief Eng	Sign & Date			

NOTE: Date & initial all entries

H:\fFORMS\Quality Assurance\approved QA\NCRWO RevE

DART AEROSPACE LTD	Work Order:	53873
Description: Webbing Tidy	Part Number:	D3215-3A
Inspection Dwg: D3215 **Rev:** D		Page 1 of 1

FIRST ARTICLE INSPECTION CHECKLIST

[X] First Article [ ] Prototype

Drawing Dimension	Tolerance	Actual Dimension	Accept	Reject	Method of Inspection	Comments
1.92	+/-0.030	1.923	✓			
0.20	+/-0.030	.194	✓			
0.78	+/-0.030	.774	✓			
0.20	+/-0.030	.204	✓			
2.46	+/-0.030	2.461	✓			
0.57	+/-0.030	.568	✓			

Measured by:	IB	Audited by:	S	Prototype Approval:	N/A
Date:	9-11-25	Date:	02/11/30	Date:	N/A

Rev	Date	Change	Revised by	Approved
A	04.02.10	New Issue	KJ/RF	
B	06.03.15	Dwg Rev update	KJ/JLM	
C	07.10.24	Dimensions updated per Dwg Rev D	KJ/EC/DD	
D	08.09.10	0.53 dimension removed	KJ/DD	

COPY OF RECORD

DART

SUBJECT TO AMENDMENT WITHOUT NOTICE

WORK ORDER NO. 63527

09-11-22

DESIGN	DRAWN BY	DART AEROSPACE LTD HAWKESBURY, ONTARIO, CANADA	
CHECKED	APPROVED	DRAWING NO. D3215	REV. D SHEET 1 OF 3
DATE 07.03.27		TITLE BELT ASSEMBLY	SCALE NTS

A	03.09.19	NEW ISSUE
B	04.01.12	AS MANUFACTURED; ADD TOLERANCE
C	04.03.05	REDUCE LENGTH; CLARIFY STITCHING
D	07.03.27	ADD WEBBING SUPPLIER; ADD LABEL THREAD AND MATERIAL; IN VIEW A–A, 1.4 WAS 1.8; ADD –3A AND –3B; UPDATE TOLERANCES

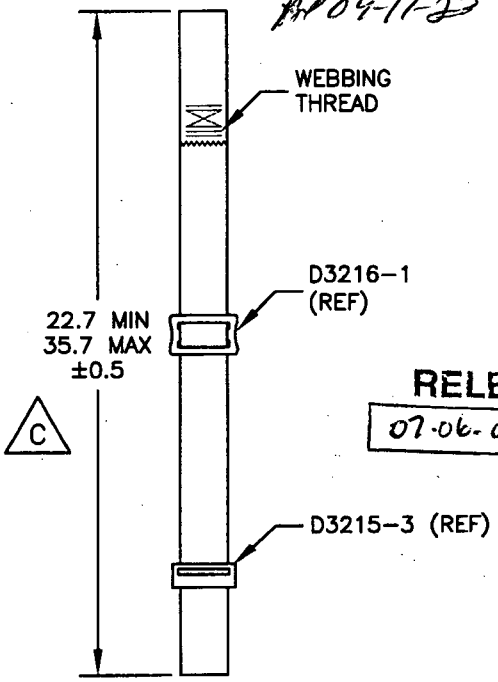

ASSEMBLY DETAIL
NOT TO SCALE

RELEASED
07-06-07

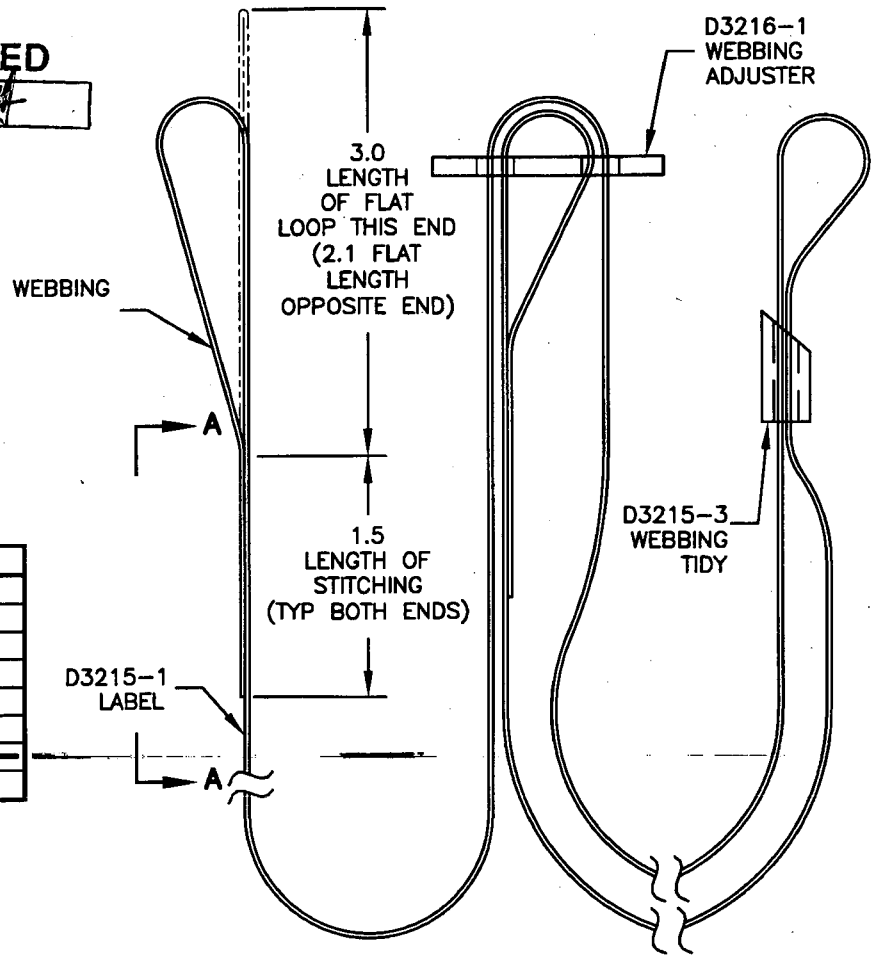

PARTS LIST:

QTY	P/N	DESCRIPTION
X	D3215-041	BELT ASSEMBLY
AS REQ'D	SEE NOTE 1	WEBBING
AS REQ'D	SEE NOTE 1	WEBBING THREAD
AS REQ'D	SEE NOTE 1	LABEL THREAD
1	D3215-1	LABEL
1	D3215-3	WEBBING TIDY
1	D3216-1	WEBBING ADJUSTER

D3215–041 BELT ASSEMBLY:

1) MATERIAL: WEBBING = LAGRAN CANADA INC. 26472, 1.8 WIDE x 0.05 THICK BLACK POLYESTER WEBBING, CERTIFIED TO FAR 29.853A3, TENSILE STRENGTH 5700 lb MIN
   OR BELT TECH CANADA INC. 27039, 1.8 WIDE x 0.05 THICK BLACK POLYESTER WEBBING, CERTIFIED TO FAR 29.853A3, TENSILE STRENGTH 6000 lb MIN D
   WEBBING THREAD = V–T–295 TYPE II CLASS A SIZE 3, BLACK NYLON THREAD
   LABEL THREAD = V–T–295 TYPE II CLASS A SIZE F, BLACK NYLON THREAD
2) ALL DIMENSIONS ARE IN INCHES UNLESS OTHERWISE NOTED.
3) TOLERANCES ARE PER DART QSI 018 UNLESS OTHERWISE NOTED.
4) SEE SHEET 3 FOR VIEW A–A

Copyright © 2003 by DART AEROSPACE LTD

THIS DOCUMENT IS PRIVATE AND CONFIDENTIAL AND IS SUPPLIED ON THE EXPRESS CONDITION THAT IT IS NOT TO BE USED FOR ANY PURPOSE OR COPIED OR COMMUNICATED TO ANY OTHER PERSON WITHOUT WRITTEN PERMISSION FROM DART AEROSPACE LTD.

w/o 53873

DESIGN	DRAWN BY	DART AEROSPACE LTD HAWKESBURY, ONTARIO, CANADA	
CHECKED	APPROVED	DRAWING NO. D3215	REV. D SHEET 2 OF 3
DATE 07.03.27		TITLE BELT ASSEMBLY	SCALE NTS

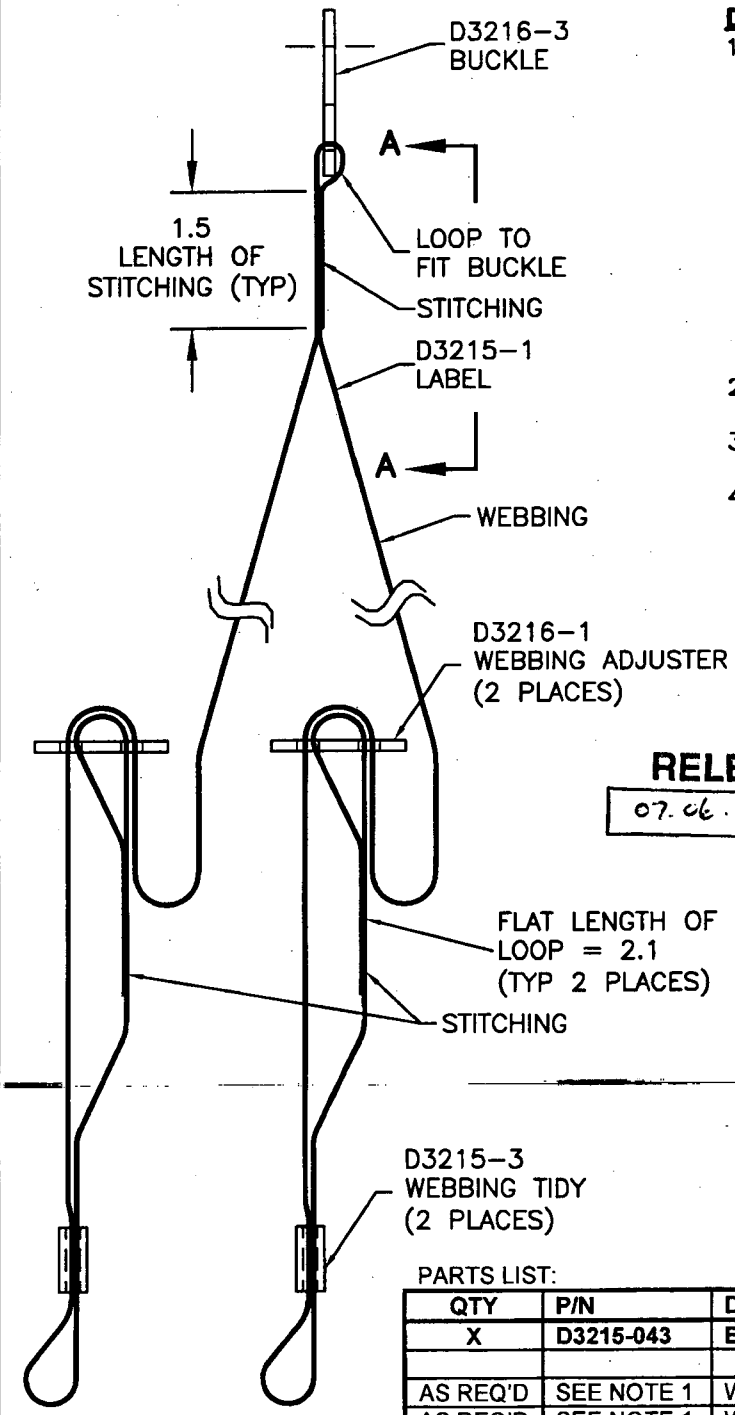

D3215-043 BELT ASSEMBLY:

1) MATERIAL:
   WEBBING = LAGRAN CANADA INC. 26472, 1.8 WIDE x 0.05 THICK BLACK POLYESTER WEBBING, CERTIFIED TO FAR 29.853A3, TENSILE STRENGTH 5700 lb MIN
   OR BELT TECH CANADA INC. 27039, 1.8 WIDE x 0.05 THICK BLACK POLYESTER WEBBING, CERTIFIED TO FAR 29.853A3, TENSILE STRENGTH 6000 lb MIN
   D
   WEBBING THREAD = V-T-295 TYPE II CLASS A SIZE 3, BLACK NYLON THREAD
   LABEL THREAD = V-T-295 TYPE II CLASS A SIZE F, BLACK NYLON THREAD
2) ALL DIMENSIONS ARE IN INCHES UNLESS OTHERWISE NOTED.
3) TOLERANCES ARE PER DART QSI 018 UNLESS OTHERWISE NOTED.
4) SEE SHEET 3 FOR VIEW A-A

RELEASED
07.06.07

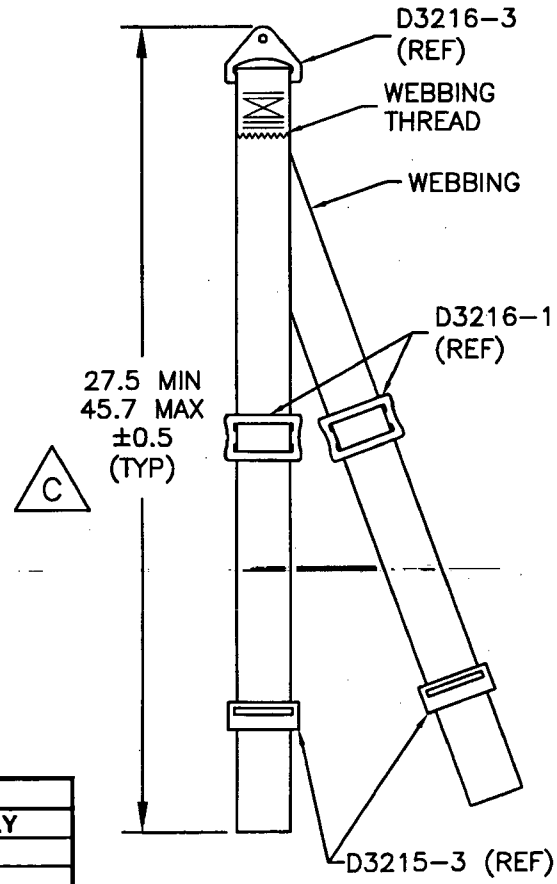

ASSEMBLY DETAIL
NOT TO SCALE

PARTS LIST:

QTY	P/N	DESCRIPTION
X	D3215-043	BELT ASSEMBLY
AS REQ'D	SEE NOTE 1	WEBBING
AS REQ'D	SEE NOTE 1	WEBBING THREAD
AS REQ'D	SEE NOTE 1	LABEL THREAD
1	D3215-1	LABEL
2	D3215-3	WEBBING TIDY
2	D3216-1	WEBBING ADJUSTER

Copyright © 2003 by DART AEROSPACE LTD
THIS DOCUMENT IS PRIVATE AND CONFIDENTIAL AND IS SUPPLIED ON THE EXPRESS CONDITION THAT IT IS NOT TO BE USED FOR ANY PURPOSE OR COPIED OR COMMUNICATED TO ANY OTHER PERSON WITHOUT WRITTEN PERMISSION FROM DART AEROSPACE LTD.

w/o 53873

DESIGN	DRAWN BY	DART AEROSPACE LTD HAWKESBURY, ONTARIO, CANADA	
CHECKED	APPROVED	DRAWING NO. D3215	REV. D SHEET 3 OF 3
DATE 07.03.27		TITLE HARNESS ASSEMBLY	SCALE 3:2

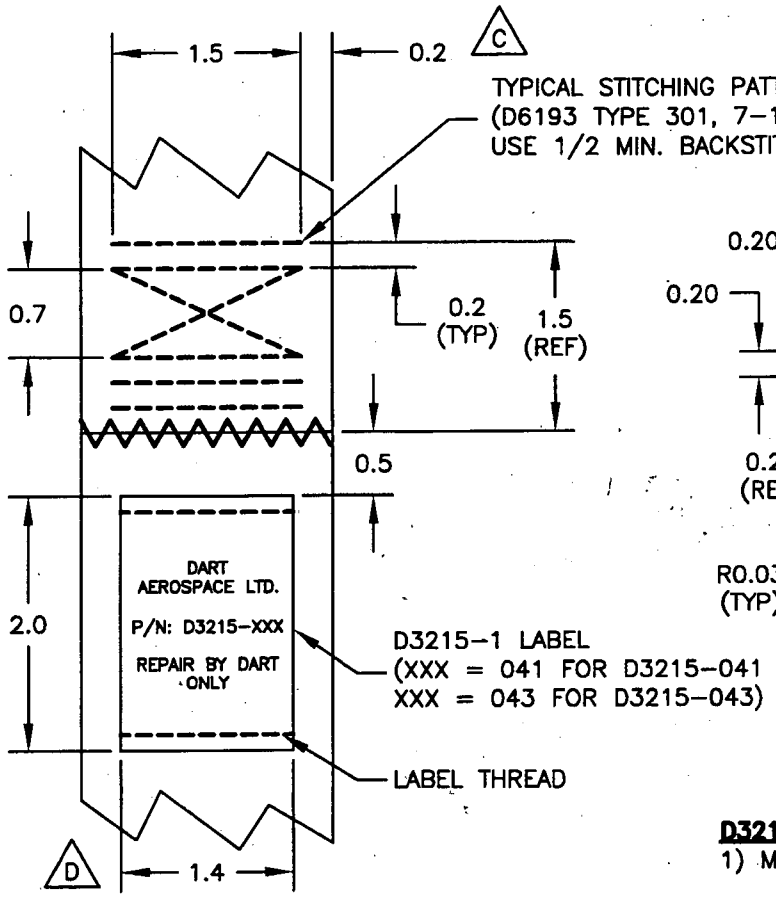

VIEW A–A

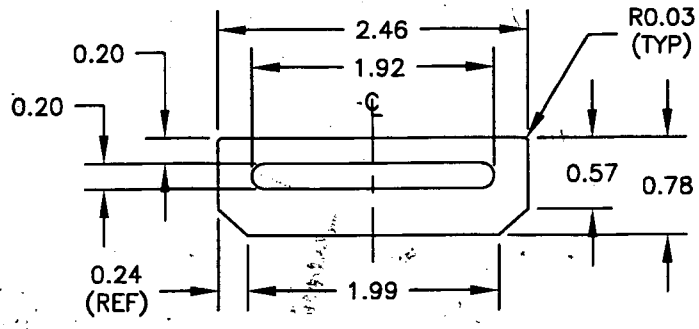

D D3215–3A FLAT PATTERN

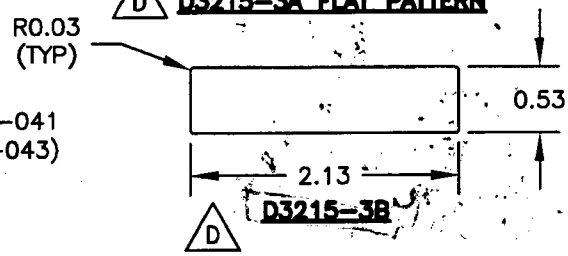

D3215–3B

D3215–3A/–3B NOTES:

1) MATERIAL: 5052–H32 ALUMINUM SHEET, 0.040 THICK PER QQ–A–250/8 OR AMS 4016 (REF DART SPEC. M5052H32S.040)
2) BEND D3215–3A PER D3215–3

D3215–1 LABEL:

1) MATERIAL: WHITE TYVEK OR WHITE POLYESTER WHICH MEETS FMVSS 302 D
2) USE 1/8 BLACK LETTERING
3) CENTER ON BELT WIDTH

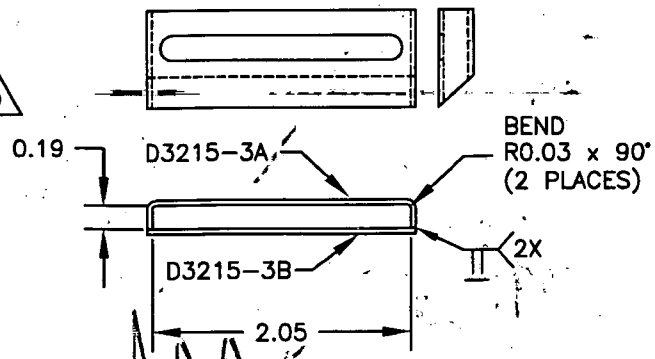

D3215–3 WEBBING TIDY

RELEASED
07.06.07

GENERAL NOTES:

1) BREAK ALL SHARP EDGES 0.005 TO 0.010
2) TOLERANCES ARE PER DART QSI 018 UNLESS OTHERWISE NOTED
3) ALL DIMENSIONS ARE IN INCHES UNLESS OTHERWISE NOTED

D3215–3 NOTES:

1) WELD PER DART QSI 004
2) FINISH: CHEMICAL CONVERSION COAT PER DART QSI 005 4.1
POWDER COAT BLACK SANDTEX (4.3.5.7) PER DART QSI 005 4.3

Copyright © 2003 by DART AEROSPACE LTD

THIS DOCUMENT IS PRIVATE AND CONFIDENTIAL AND IS SUPPLIED ON THE EXPRESS CONDITION THAT IT IS NOT TO BE USED FOR ANY PURPOSE OR COPIED OR COMMUNICATED TO ANY OTHER PERSON WITHOUT WRITTEN PERMISSION FROM DART AEROSPACE LTD.